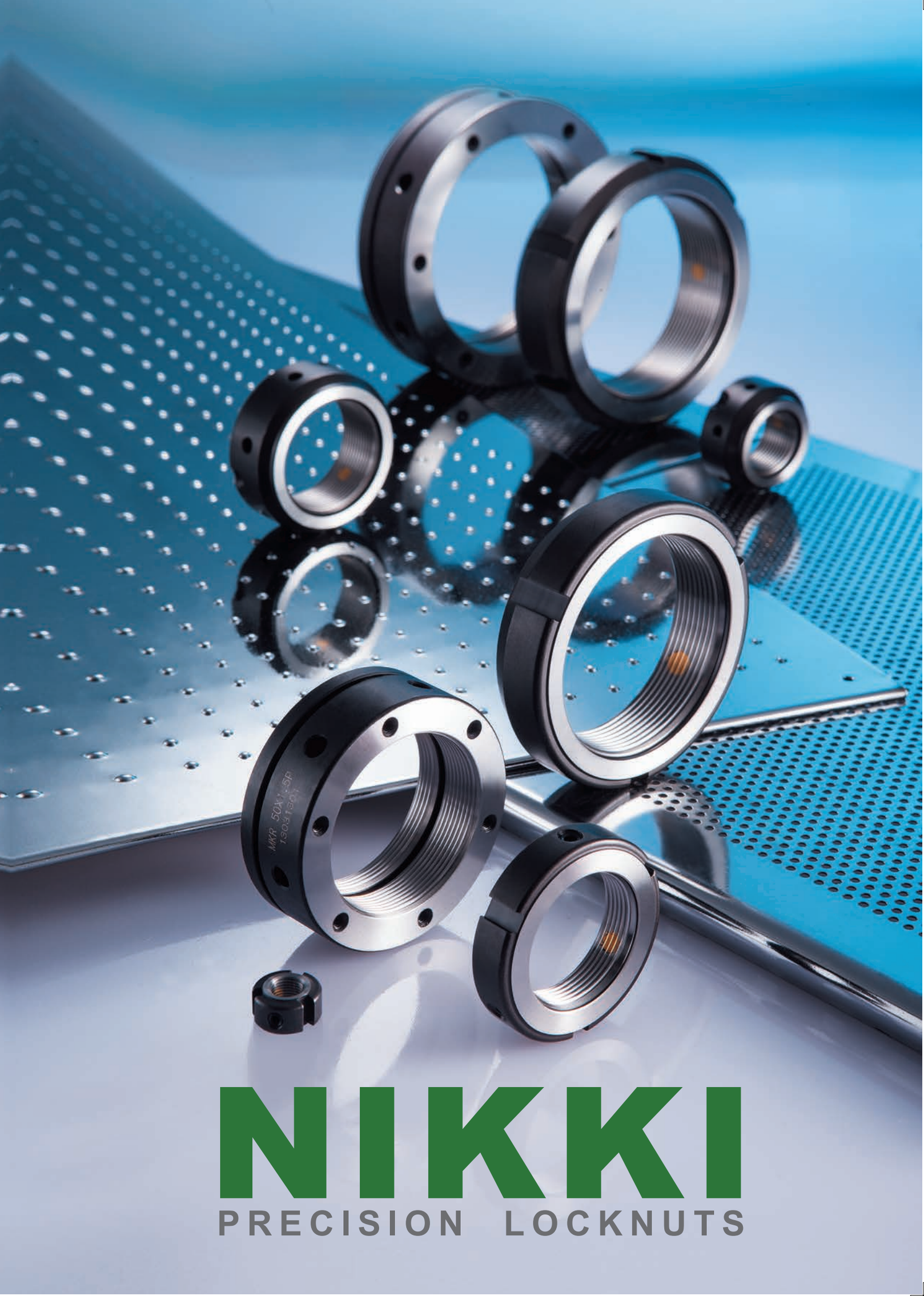

NIKKI

PRECISION LOCKNUTS

NIKKI

HSIANG KAI FU CO. LTD. is a professional manufacturer of precision locknuts for bearings and precision machine components. It was founded in 1994 and is located in The Taichung Precision Machinery Technological Park in Taiwan. We insist on the highest quality and take pride in our technical skills. We provide the best products at competitive prices to help customers improve their production. Our excellent NIKKI made locknuts have a reputation that is spread by all who know them.

Innovation & Service

As we continue to accumulate experience we strive to develop and innovate based on our customers' requirements. We want to help our customers improve their production quality and volume. We serve customers with a friendly, professional attitude and deliver on time. NIKKI achieves maximum customer satisfaction through its quality products, high value purchase options and outstanding services. Our goal is to be the best and nothing less.

CERTIFICATE

The Certification Body of TÜV Rheinland Group

Hsiang Kai Fu Co., Ltd.
No. 8, Jingke 8th Road, Nantun Dist.,
Taichung City 40852, Taiwan

Design, Manufacturing and Sales of
Precision Locknut and Machine Component

ISO 9001:2008

Products and Service

- Precision Locknuts for Bearings
- Firm Fastening Locknuts
- Custom Locknuts
- Product Design and Development

Please let us know if you do not see what you are looking for and we will be pleased to give a quote for special requests.

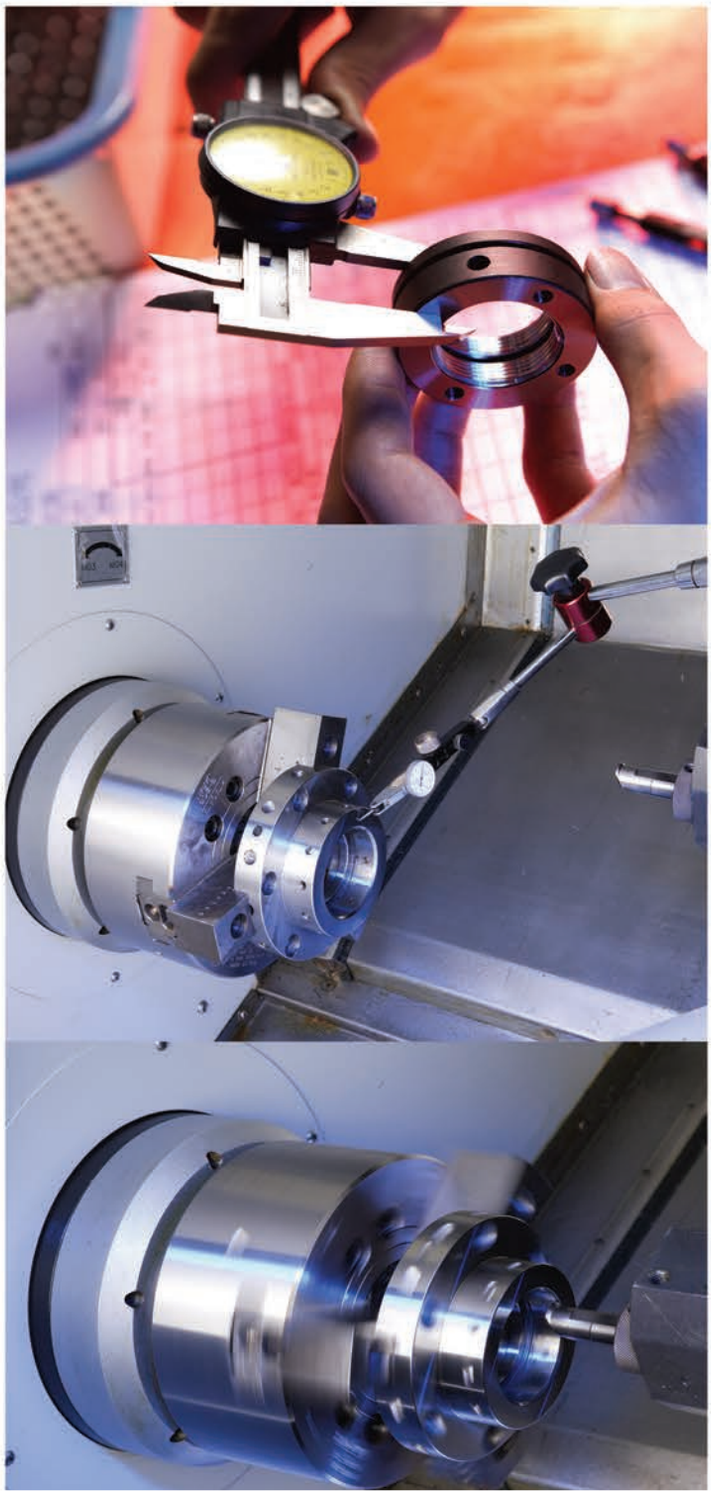

EXAMPLES OF TYPICAL APPLICATION

- When applied to a rotating spindle / ball screw of a machine, it will effectively prevent it from distortion and improve precision of assembly.
- Our Locknuts give you simple set up, and prolong the life of your machine.
- When applied to other areas, the problems of measuring, adjusting and the deformation after the bolt is locked etc, can all be improved significantly.

Spindle Structure

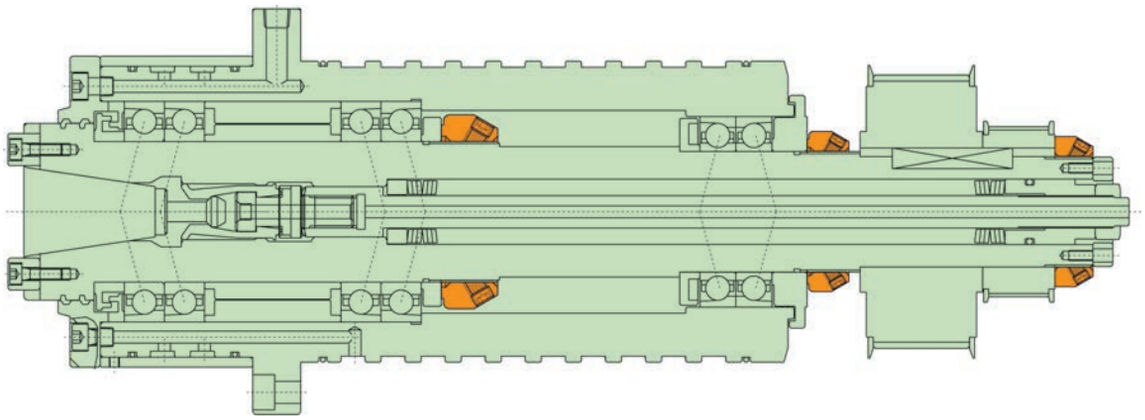

Ballscrews Structure

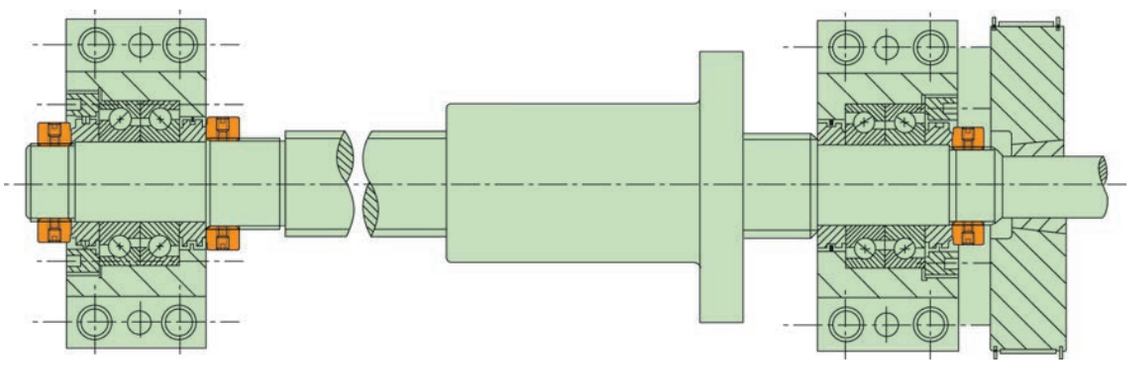

ADVANTAGE BY USING PRECISION LOCKNUT

Without Precision Locknuts

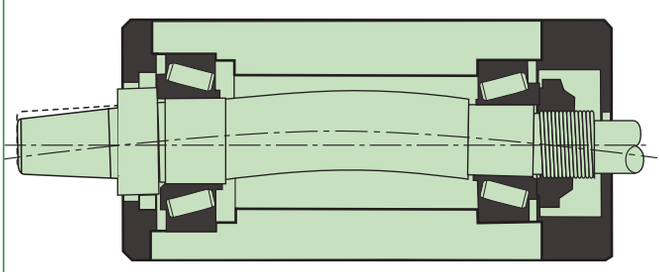

- Distortion (vibration) due to misalignment.

With Precision Locknuts

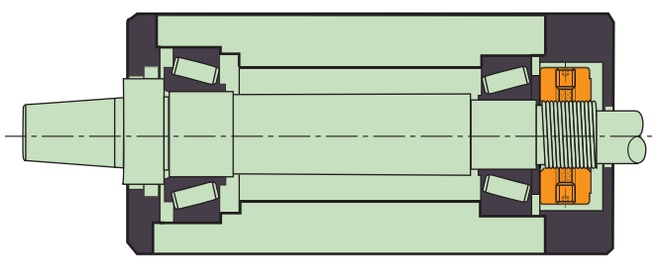

- They are effective at preventing spindle distortion.

"High Locking","High Precision","High Stability"
NIKKI advantage :

- Thread precision of ISO 4H.
- High load carrying capacity.
- Easy correction to a right angle against axis.
- Lock without a washer or keyway.
- Save assembly time with increased precision and save cost.
- Effectively prevent spindles and ball screws from distortion.
- Prolong the life of bearings and machines.
- Easy to assemble and disassemble.
- Can be reused if handled properly.

1.Material Information

- (1).Materials Used: We choose JIS SCM440 / DIN 42 CrMo4 /AISI 4140
- (2).Analysis Report (SGS): The Certificate of RoHS & SVHC free. (E.U.)

2.Measuring Process

We measure the thickness of the locknut. (refer to photo)

We measure the inner diameter of the locknut. (refer to photo)

We check the thread precision by a gauge to insure ISO 4H. (refer to photo)

We measure the locknut thread run-out. (refer to photo)

3.Measuring Instrument

- Universal length measuring instrument

- Universal measuring microscope

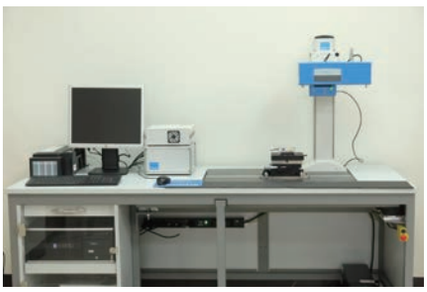

- Roughness and contour instrument

MF SERIES - FLANK LOCKING

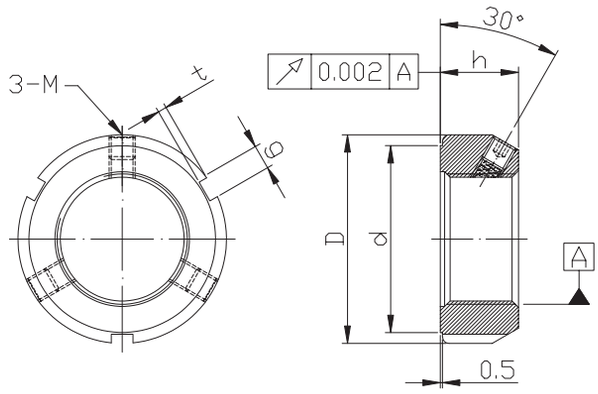

- The setscrews of locknut intersect at a 30˚ angle with the radial axis which drive the locking brass to be perfectly stuck on the thread flank of shaft.
- No thrust washer or keyway needed.
- Easy to assemble and disassemble.
- Can be reused if handled properly.
- The connecting face and thread area are all produced by a high precision grinding process.

- **Material** **SCM 440**
- **Hardness** **HRC 28-32**
- **Precision** **ISO 4H**

Type & Pitch	Dimensions					Axial Load Static kN	Loosening Torque kg-cm	Screw	Torque
	D	h	g	t	d			DIN	Max kg-cm
MF12 x 1.0P	30	14	4	2	25	40	200	M5	48
MF15 x 1.0P	34	16			26	60	250	M6	80
MF17 x 1.0P	36		5	2	28	70	300		
MF20 x 1.0P	38	18			32	90	400		
MF20 x 1.5P						90	400		
MF25 x 1.5P	42				36	120	800		
MF30 x 1.5P	48				43	145	1400		
MF35 x 1.5P	53				48	170	1800	M8	190
MF40 x 1.5P	58	20	6	2.5	52	190	2200		
MF45 x 1.5P	65				59	220	2500		
MF50 x 1.5P	70				64	250	2700		
MF55 x 2.0P	75	22	7	3	68	310	2900		
MF60 x 2.0P	80				73	350	3100		
MF65 x 2.0P	85				78	400	3200		
MF70 x 2.0P	92	24	8	3.5	84	450	3400		
MF75 x 2.0P	98				90	480	3600		
MF80 x 2.0P	105				96	580	3800		
MF85 x 2.0P	112				104	620	4000		
MF90 x 2.0P	118	26	10	4	108	680	4500		
MF100 x 2.0P	128				118	740	5000		
MF110 x 2.0P	145	30	12	5	132	800	5500		
MF120 x 2.0P	155				142	860	6000		
MF130 x 2.0P	165				152	920	6500		
MF140 x 2.0P	180	32			165	980	7000	M10	360
MF150 x 2.0P	195				180	1050	7500		
MF160 x 3.0P	210	34			190	1200	8000		
MF170 x 3.0P	220				200	1260	8500		
MF180 x 3.0P	230	36			205	1370	9000		
MF190 x 3.0P	240				220	1430	9500		
MF200 x 3.0P	250				230	1500	9900		

When ordering above products, please refer to the Type & Pitch.

- If a left hand thread is required, please notify “L” after the Type & Pitch. For example: MF25X1.5P-L
- If an inch thread is required, please refer to the Type & Pitch. For example: MF25-U20
- We typically appreciate orders 45 days in advance.

TMF SERIES - FLANK LOCKING

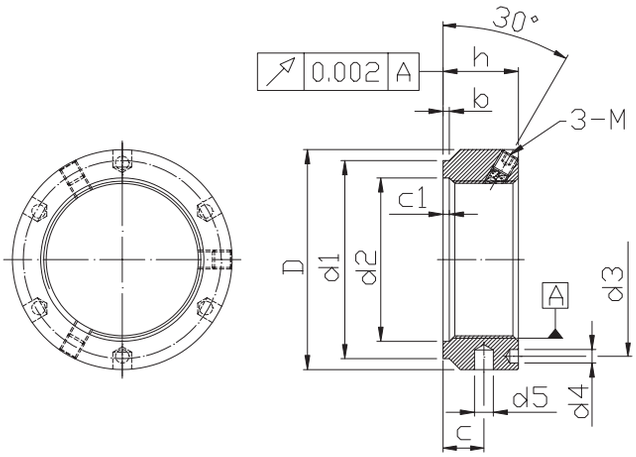

- The setscrews of locknut intersect at a 30˚ angle with the radial axis which drive the locking brass to be perfectly stuck on the thread flank of shaft.
- No thrust washer or keyway needed.
- Easy to assemble and disassemble.
- Can be reused if handled properly.
- The connecting face and thread area are all produced by a high precision grinding process.

- **Material** SCM 440
- **Hardness** HRC 28-32
- **Precision** ISO 4H

Type & Pitch	Dimensions										Axial Load Static KN	Loosening Torque kg-cm	Screw Torque	
	D	h	d1	d2	d3	d4	d5	b	c	c1			DIN	Max kg-cm
TMF25X1.5P	42	20	35	26	32.5	4.3	4	2	11	2	130	450	M6	80
TMF30X1.5P	48		40	32	40.5		5				160	550		
TMF35X1.5P	53		47	38	45.5						190	650		
TMF40X1.5P	58	22	52	42	50.5				12		210	800		
TMF45X1.5P	68		58	48	58		6				240	950		
TMF50X1.5P	70	24	63	52	61.5				13		300	1150		
TMF55X1.5P	75		70	58	66.5			3		3	340	1350		
TMF60X1.5P	84		75	62	74.5	5.3					380	1500		
TMF65X1.5P	88	25	80	68	78.5						460	1700		
TMF70X1.5P	95	26	86	72	85		8		14		490	2850	M8	190
TMF75X1.5P	100		91	77	88	6.4			13		520	3050		
TMF80X2.0P	110	30	97	83	95				16		620	3250		
TMF85X2.0P	115	32	102	88	100				17		650	6600	M10	360
TMF90X2.0P	120		110	93	108						680	7200		
TMF95X2.0P	125		114	98	113						710	7800		
TMF100X2.0P	130		120	103	118						740	8400		
TMF110X2.0P	140		132	112	128						800	9600		
TMF120X2.0P	155		142	122	140						860	10800		
TMF130X3.0P	165		156	132	153						920	12000		
TMF140X3.0P	180		166	142	165		10				980	13200		
TMF150X3.0P	190		180	152	175			5		5	1040	14400		
TMF160X3.0P	205		190	162	185	8.4					1100	16000		
TMF170X3.0P	215		205	172	195						1160	17500		
TMF180X3.0P	230		215	182	210						1220	19000		
TMF190X3.0P	240		225	192	224						1280	20500		
TMF200X3.0P	245		237	202	229						1340	22000		

When ordering above products, please refer to the Type & Pitch.

- We typically appreciate orders 45 days in advance.

SFZ SERIES - FLANK LOCKING

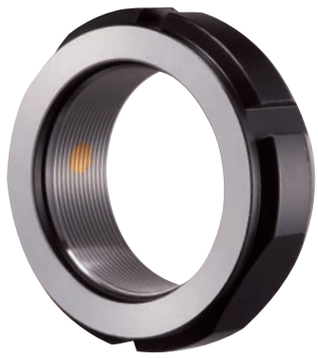

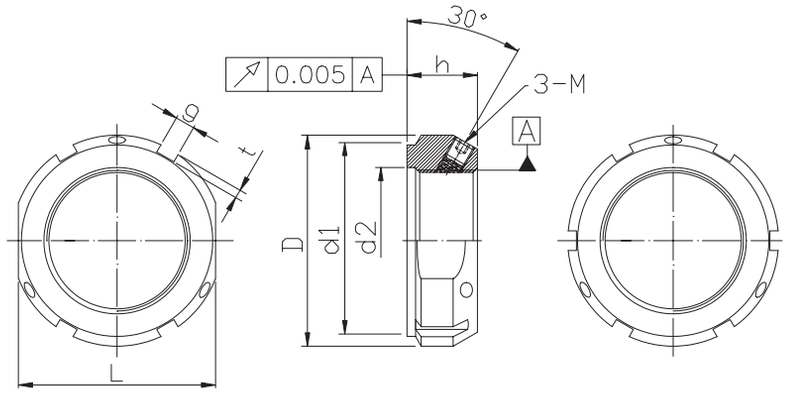

SFZ10-SFZ75

SFZ80-SFZ200

- The setscrews of locknut intersect at a 30˚ angle with the radial axis which drive the locking brass to be perfectly stuck on the thread flank of shaft.
- No thrust washer or keyway needed.
- Easy to assemble and disassemble.
- Can be reused if handled properly.
- The connecting face and thread area are all produced by a high precision turning process.

- **Material** **SCM 440**
- **Precision** **ISO 4H**

Type & Pitch	Dimensions							Axial Load Static KN	Loosening Torque kg-cm	Screw	Torque
	D	h	g	t	d1	d2	L			DIN	Max kg-cm
SFZ10X0.75P	28	14	4	2	23	11	24	35	150	M5	48
SFZ12X1.0P	30				25	13	27	40	180		
SFZ15X1.0P	33	16			28	16	30	60	200		
SFZ17X1.0P	37	18	5		33	18	34	80	250	M6	80
SFZ20X1.0P	40				35	21	36	90	350		
SFZ25X1.5P	44	20			39	26	41	130	450		
SFZ30X1.5P	49				44	32	46	160	550		
SFZ35X1.5P	54	22			49	38	50	190	650		
SFZ40X1.5P	65		6	2.5	59	42	60	210	800	M8	190
SFZ45X1.5P	70				64	48	65	240	950		
SFZ50X1.5P	75	25	7	3	68	52	70	300	1150		
SFZ55X2.0P	85				78	58	80	340	2250		
SFZ60X2.0P	90	26	8	3.5	82	62	85	380	2450		
SFZ65X2.0P	95	28			87	68	90	460	2650		
SFZ70X2.0P	100				92	72	95	490	2850		
SFZ75X2.0P	105				97	77	100	520	3050		
SFZ80X2.0P	110	32			100	83	-	620	3250		
SFZ85X2.0P	120		10	4	110	88	-	650	6600	M10	360
SFZ90X2.0P	125				115	93	-	680	7200		
SFZ95X2.0P	130				120	98	-	710	7800		
SFZ100X2.0P	135				125	103	-	740	8400		
SFZ110X2.0P	145				134	112	-	800	9600		
SFZ120X2.0P	155				144	122	-	860	10800		
SFZ130X2.0P	165		12	5	154	132	-	920	12000		
SFZ140X2.0P	175		14	6	164	142	-	980	13200		
SFZ150X2.0P	185				174	152	-	1040	14400		
SFZ160X3.0P	195				184	162	-	1100	16000		
SFZ170X3.0P	205				194	172	-	1160	17500		
SFZ180X3.0P	215		16	7	204	182	-	1220	19000		
SFZ190X3.0P	225				214	192	-	1280	20500		
SFZ200X3.0P	235		18	8	224	202	-	1340	23000		

When ordering above products, please refer to the Type & Pitch.

- We typically appreciate orders 45 days in advance.

MR SERIES - RADIAL LOCKING

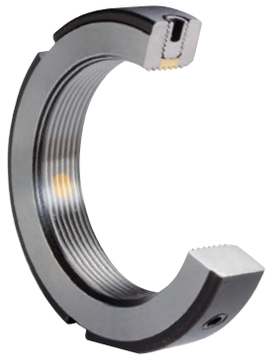

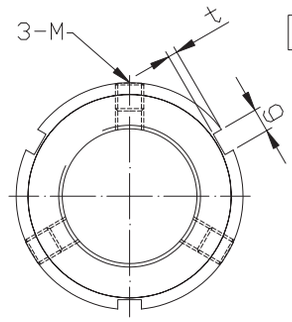

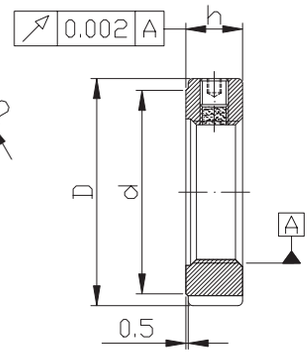

- The setscrews of locknut intersect at a 90˚ angle with the axis which drive the locking brass to be perfectly stuck on the thread of shaft. This series locknut is designed to special area in where space is limited.
- No thrust washer or keyway needed.
- Easy to assemble and disassemble.
- Can be reused if handled properly.
- The connecting face and thread area are all produced by a high precision grinding process.

- **Material** SCM 440
- **Hardness** HRC 28-32
- **Precision** ISO 4H

Type & Pitch	Dimensions					Axial Load Static kN	Loosening Torque kg-cm	Screw	Torque
	D	h	g	t	d			DIN	Max kg-cm
MR6 x 0.5P	16	8	3	2	11	7.8	110	M4	22
MR8 x 0.75P						10.2	150		
MR10 x 0.75P	18				13	11	180		
MR12 x 1.0P	24				19	20	190		
MR15 x 1.0P	28				23	30	220		
MR17 x 1.0P	32	10	4	2	27	40	280	M5	48
MR20 x 1.0P	35				30	50	300		
MR20 x 1.5P						50	300		
MR25 x 1.5P	42	12	5	2	36	75	550	M6	80
MR30 x 1.5P	48				43	90	750		
MR35 x 1.5P	53				48	110	900		
MR40 x 1.5P	58	14	6	2.5	52	130	1200		
MR45 x 1.5P	65				59	150	1300		
MR50 x 1.5P	70				64	175	1500		
MR55 x 2.0P	75	16	7	3	68	225	1700	M8	190
MR60 x 2.0P	80				73	250	2000		
MR65 x 2.0P	85				78	290	2200		
MR70 x 2.0P	92	18	8	3.5	84	340	2400		
MR75 x 2.0P	98				90	360	2600		
MR80 x 2.0P	105				96	430	2800		
MR85 x 2.0P	112				104	460	3000		
MR90 x 2.0P	118	20	10	4	108	520	3200		
MR100 x 2.0P	128				118	570	3600		
MR110 x 2.0P	145	24	12	5	132	640	4000		
MR120 x 2.0P	155				142	680	4500		
MR130 x 2.0P	165				152	730	5000		
MR140 x 2.0P	180	26			165	800	5500	M10	360
MR150 x 2.0P	195				180	850	6000		
MR160 x 3.0P	210	28			190	980	6500		
MR170 x 3.0P	220				200	1030	7000		
MR180 x 3.0P	230	30			210	1140	7500		
MR190 x 3.0P	240				220	1200	8000		
MR200 x 3.0P	250				230	1250	8500		

When ordering above products, please refer to the Type & Pitch.

- If a left hand thread is required, please notify “L” after the Type & Pitch. For example:MR25x1.5P -L
- If an inch thread is required, please refer to the Type & Pitch. For example:MR25-U20
- We typically appreciate orders 45 days in advance.

SR SERIES - RADIAL LOCKING

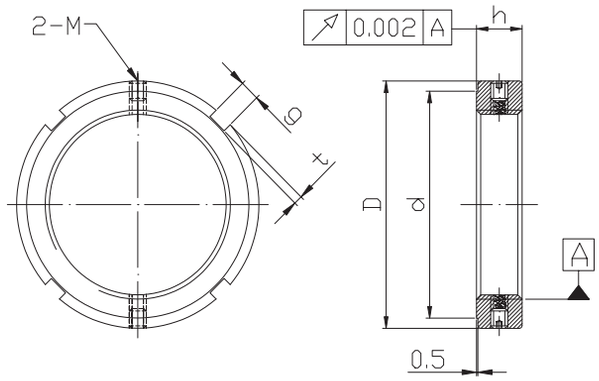

- The setscrews of locknut intersect at a 90˚ angle with the axis which drive the locking brass to be perfectly stuck on the thread of shaft. This series locknut is designed to special area in where space is limited.
- No thrust washer or keyway needed.
- Easy to assemble and disassemble.
- Can be reused if handled properly.
- The connecting face and thread area are all produced by a high precision grinding process.

- **Material** SCM 440
- **Hardness** HRC 28-32
- **Precision** ISO 4H

Type & Pitch	Dimensions					Screw	Torque
	D	h	g	t	d	DIN	Max kg-cm
SR8X0.75P	16	8	3	2	11	M4	22
SR10X0.75P	18				13		
SR12X1.0P	22				18		
SR15X1.0P	25				21		
SR17X1.0P	28	10	4		23	M5	48
SR20X1.0P	32				27		
SR20X1.5P							
SR25X1.5P	38	12	5		33	M6	80
SR30X1.5P	45				40		
SR35X1.5P	52				47		
SR40X1.5P	58	14	6	2.5	52		
SR45X1.5P	65				59		
SR50X1.5P	70				64		
SR55X2.0P	75	16	7	3	68		
SR60X2.0P	80				73		
SR65X2.0P	85				78		
SR70X2.0P	92	18	8	3.5	85	M8	190
SR75X2.0P	98				90		
SR80X2.0P	105				95		
SR85X2.0P	110				102		
SR90X2.0P	120	20	10	4	108		
SR95X2.0P	125				113		
SR100X2.0P	130				120		
SR105X2.0P	140	22	12	5	126	M10	360
SR110X2.0P	145				133		
SR115X2.0P	150				137		
SR120X2.0P	155	24			138		
SR125X2.0P	160				148		
SR130X2.0P	165				149		
SR135X2.0P	175	26	14	6	160	M12	600
SR140X2.0P	180						
SR145X2.0P	190				172		
SR150X2.0P	195				171		
SR155X3.0P	200	28	16	7	182		
SR160X3.0P	210						
SR165X3.0P	210				193		
SR170X3.0P	220						
SR180X3.0P	230	30	18	8	203		
SR190X3.0P	240				214		
SR200X3.0P	250	32			226		

When ordering above products, please refer to the Type & Pitch.

- We typically appreciate orders 45 days in advance.

MRRA SERIES - RADIAL LOCKING

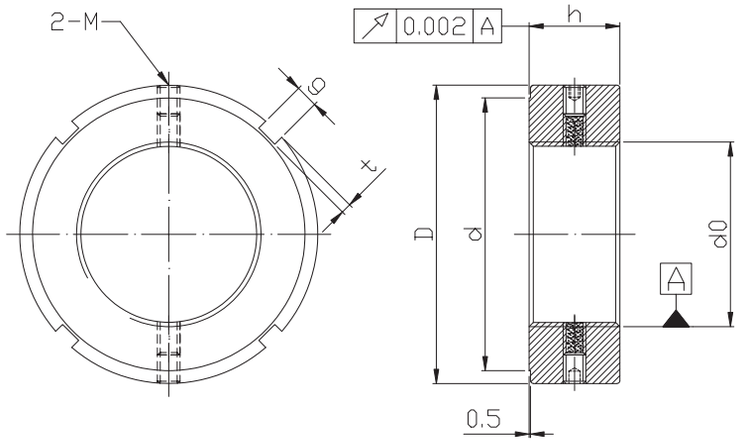

- The setscrews of locknut intersect at a 90˚ angle with the axis which drive the locking brass to be perfectly stuck on the thread of shaft. This series is special designed to generate powerful axial capacity due to more threading numbers of the locknut itself.
- No thrust washer or keyway needed.
- Easy to assemble and disassemble.
- Can be reused if handled properly.
- The connecting face and thread area are all produced by a high precision grinding process.

- **Material** SCM 440
- **Hardness** HRC 28-32
- **Precision** ISO 4H

Type	Dimensions						Screw	Torque
	do	D	h	g	t	d	DIN	Max kg-cm
MRRA15/32	M15X1.0P	32	20	4	2	27	M5	48
MRRA17/38	M17X1.0P	38		5		33		
MRRA20/38	M20X1.0P	38				33		
MRRA20/38	M20X1.5P	38				33		
MRRA20/52	M20X1.0P	52	25			47		
MRRA20/52	M20X1.5P	52				47		
MRRA25/45	M25X1.5P	45	20			40	M6	80
MRRA25/58	M25X1.5P	58	24	6	2.5	52		
MRRA30/52	M30X1.5P	52	22	5	2	47		
MRRA30/65	M30X1.5P	65	30	6	2.5	59		
MRRA35/58	M35X1.5P	58	22			52		
MRRA35/70	M35X1.5P	70	30			64		
MRRA40/62	M40X1.5P	62	22			56	M8	190
MRRA40/75	M40X1.5P	75	30			69		
MRRA45/68	M45X1.5P	68	24			62		
MRRA45/85	M45X1.5P	85	32	7	3	78		
MRRA50/75	M50X1.5P	75	25	6	2.5	68		
MRRA50/92	M50X1.5P	92	32	8	3.5	84		
MRRA55/98	M55X2.0P	98				90		
MRRA60/98	M60X2.0P	98				90		
MRRA65/105	M65X2.0P	105				97		
MRRA70/110	M70X2.0P	110	35			102		
MRRA75/125	M75X2.0P	125	38			117		
MRRA80/120	M80X2.0P	120	35	10	4	105		
MRRA90/130	M90X2.0P	130	38			120		
MRRA90/155	M90X2.0P	155				146		
MRRA100/140	M100X2.0P	140		12	5	128	M10	360
MRRA110/180	M110X2.0P	180	40	14	6	167		
MRRA130/210	M130X2.0P	210		16	7	205		
MRRA150/230	M150X2.0P	230	42	18	8	215	M12	560

When ordering above products, please refer to the Type & Pitch.

- We typically appreciate orders 45 days in advance.

MRZ SERIES - RADIAL LOCKING

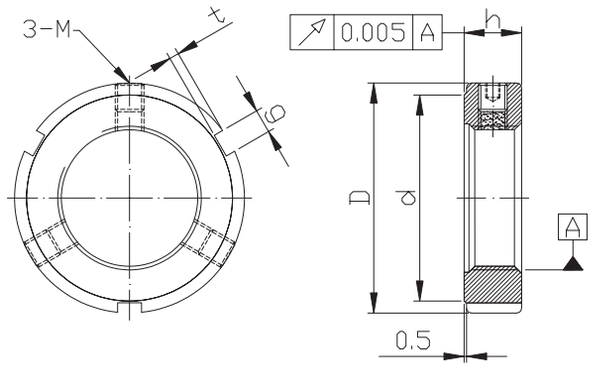

- The setscrews of locknut intersect at a 90˚ angle with the axis which drive the locking brass to be perfectly stuck on the thread of shaft. This series locknut is designed to special area in where space is limited.
- No thrust washer or keyway needed.
- Easy to assemble and disassemble.
- Can be reused if handled properly.
- The connecting face and thread area are all produced by a high precision turning process.

- **Material** SCM 440
- **Hardness** HRC 28-32
- **Precision** ISO 4H

Type & Pitch	Dimensions					Axial Load Static kN	Loosening Torque kg-cm	Screw	Screw Torque
	D	h	g	t	d			DIN	Max kg-cm
MRZ6 x 0.5P	16	8	3	2	11	7.8	110	M4	22
MRZ8 x 0.75P/1.0P						10.2	150		
MRZ10 x 0.75P/1.0P	18				13	11	180		
MRZ12 x 1.0P/1.5P	20				18	20	190		
MRZ14 x 1.0P/1.5P	24				20	25	200		
MRZ15 x 1.0P	25				21	30	220		
MRZ16 x 1.0P/1.5P	28	10	4	2	23	35	250	M5	48
MRZ17 x 1.0P						40	280		
MRZ18 x 1.0P/1.5P	32				27	45	290		
MRZ20 x 1.0P/1.5P						50	300		
MRZ22 x 1.0P/1.5P	35				30	65	400		
MRZ24 x 1.0P/1.5P	37	12	5	2	32	70	450	M6	80
MRZ25 x 1.5P	38				33	75	550		
MRZ26 x 1.5P	40					80			
MRZ27 x 1.5P					35		600		
MRZ28 x 1.0P/1.5P	43				38	85	650		
MRZ30 x 1.5P	45				40	90	750		
MRZ33 x 1.5P	50				45	100	800		
MRZ35 x 1.5P	52				47	110	900		
MRZ36 x 1.5P	53					115	950		
MRZ38 x 1.5P	58	14	6	2.5	52	120	1000		
MRZ39 x 1.5P						125	1100		
MRZ40 x 1.5P						130	1200		
MRZ42 x 1.5P	62				56	140	1250		
MRZ45 x 1.5P	65				59	150	1300		
MRZ48 x 1.5P	68				62	160	1400		
MRZ50 x 1.5P	70				64	175	1500		
MRZ52 x 1.5P	72	16			65	200	1600	M8	190
MRZ55 x 2.0P	75		7	3	68	225	1700		
MRZ56 x 2.0P						235	1800		
MRZ60 x 2.0P	80				73	250	2000		
MRZ64 x 2.0P	85				78	270	2100		
MRZ65 x 2.0P						290	2200		

When ordering above products, please refer to the Type & Pitch.

- We typically appreciate orders 45 days in advance.

MRZ SERIES - RADIAL LOCKING

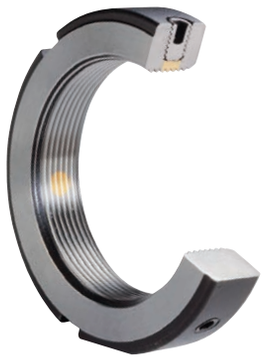

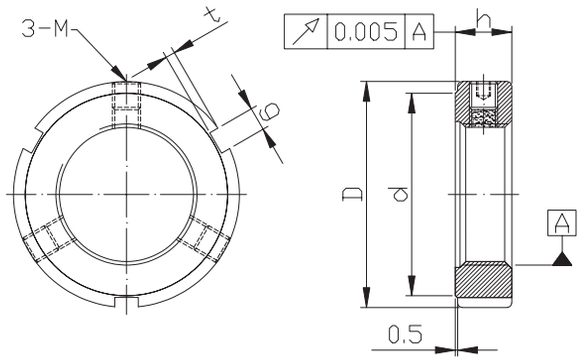

- The setscrews of locknut intersect at a 90˚ angle with the axis which drive the locking brass to be perfectly stuck on the thread of shaft. This series locknut is designed to special area in where space is limited.
- No thrust washer or keyway needed.
- Easy to assemble and disassemble.
- Can be reused if handled properly.
- The connecting face and thread area are all produced by a high precision turning process.

- **Material** **SCM 440**
- **Hardness** **HRC 28-32**
- **Precision** **ISO 4H**

Type & Pitch	Dimensions					Axial Load Static kN	Loosening Torque kg-cm	Screw	Screw Torque
	D	h	g	t	d			DIN	Max kg-cm
MRZ68 x 2.0P	92	18	8	3.5	84	320	2300	M8	190
MRZ70 x 2.0P						340	2400		
MRZ72 x 2.0P	95				86	350	2500		
MRZ75 x 2.0P	98				90	360	2600		
MRZ76 x 2.0P						370	2700		
MRZ80 x 2.0P	105				96	430	2800		
MRZ85 x 2.0P	112				104	460	3000		
MRZ90 x 2.0P	118	20	10	4	108	520	3200		
MRZ95 x 2.0P	123				113	550	3400		
MRZ100 x 2.0P	128				118	570	3600		
MRZ105 x 2.0P	137				125	600	3800		
MRZ110 x 2.0P	145	24	12	5	132	640	4000		
MRZ115 x 2.0P	150				137	620	3900		
MRZ118 x 2.0P	155				142	640	4200		
MRZ120 x 2.0P						680	4500		
MRZ125 x 2.0P	160				147	700	4700		
MRZ130 x 2.0P	165				152	730	5000		
MRZ135 x 2.0P	175				160	760	5200		
MRZ138 x 2.0P	178				163	780	5400		
MRZ140 x 2.0P	180	26			165	800	5500	M10	360
MRZ145 x 2.0P	190				175	820	5800		
MRZ150 x 2.0P	195				180	850	6000		
MRZ155 x 3.0P	200	28				900	6200		
MRZ160 x 3.0P	210				190	980	6500		
MRZ165 x 3.0P	215				195	1000	6700		
MRZ170 x 3.0P	220				200	1030	7000		
MRZ180 x 3.0P	230	30			210	1140	7500		
MRZ190 x 3.0P	240				220	1200	8000		
MRZ200 x 3.0P	250				230	1250	8500		

When ordering above products, please refer to the Type & Pitch.

- We typically appreciate orders 45 days in advance.

MA SERIES - AXIAL LOCKING

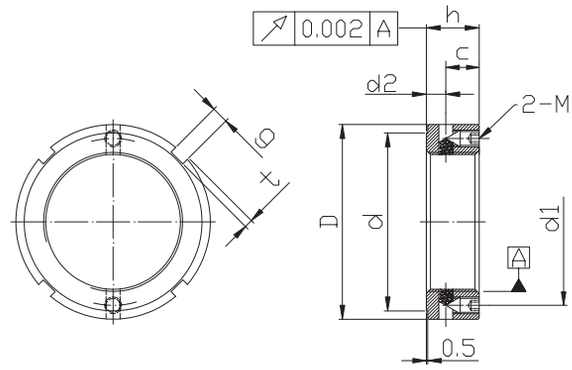

- The setscrews of locknut intersect at an equal angle with the axis which drive the locking brass to be perfectly stuck on the thread of shaft. This series locknut is designed to special area in where space is limited.
- No thrust washer or keyway needed.
- Easy to assemble and disassemble.
- Can be reused if handled properly.
- The connecting face and thread area are all produced by a high precision grinding process.

- **Material** **SCM 440**
- **Hardness** **HRC 28-32**
- **Precision** **ISO 4H**

Type & Pitch	Dimensions								Screw	Torque
	D	h	g	t	d	d1	d2	c	DIN	Max kg-cm
MA17X1.0P	28	15	4	2	23	22.5	3.5	7	M4	22
MA20X1.0P	32				27	26				
MA25X1.5P	38	17	5		33	31.5	4.5	8	M5	48
MA30X1.5P	45				40	37.5				
MA35X1.5P	52				47	43.5				
MA40X1.5P	58	19	6	2.5	52	49	5.2	9	M6	80
MA45X1.5P	65				59	55				
MA50X1.5P	70				64	60				
MA55X2.0P	75	21	7	3	68	65				
MA60X2.0P	80				73	70				
MA65X2.0P	85				78	75				
MA70X2.0P	92	23	8	3.5	85	81	7	12	M8	190
MA75X2.0P	98				90	87				
MA80X2.0P	105				95	93				
MA85X2.0P	110				102	98				
MA90X2.0P	120	25	10	4	108	103				
MA95X2.0P	125				113	108				
MA100X2.0P	130				120	113				
MA105X2.0P	140	27	12	5	126	123	8.7	15	M10	360
MA110X2.0P	145				133	128				
MA115X2.0P	150				137	133				
MA120X2.0P	155	29			138	138				
MA125X2.0P	160				148	143				
MA130X2.0P	165				149	148				
MA135X2.0P	175	31	14	6	160	155	10.7	17	M12	560
MA140X2.0P	180				160	160				
MA145X2.0P	190				172	165				
MA150X2.0P	195				171	170				
MA160X3.0P	210	33	16	7	182	179				
MA170X3.0P	220				193	189				
MA180X3.0P	230	35	18	8	203	199				
MA190X3.0P	240				214	209				
MA200X3.0P	250	37			226	219				

When ordering above products, please refer to the Type & Pitch.

- We typically appreciate orders 45 days in advance.

AM SERIES - AXIAL LOCKING

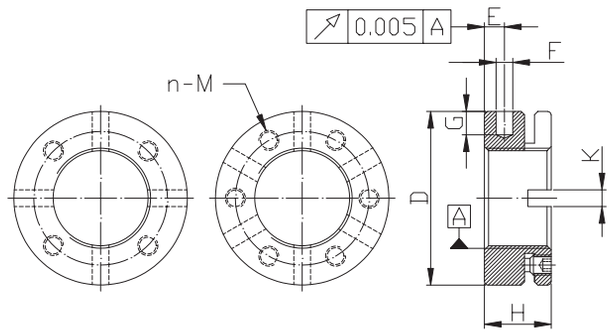

M40 and under M45 and above

- The locknut connecting face is produced by grinding. The series is special designed to generate powerful braking capacity due to deformation of locknut itself. This results in male and female threads connecting tightly together.
- No thrust washer or keyway needed.
- Easy to assemble and disassemble.
- Can be reused if handled properly.

- **Material** **SCM 440**
- **Hardness** **HRC 28-32**
- **Precision** **ISO 4H**

Type & Pitch	Dimensions						Screw
	D	H	K	E	F	G	n - M
AM15X1.0P	30	18	4	5	4	5	4-M5
AM17X1.0P	32	18	4	5	4	5	4-M5
AM20X1.0P	38	18	4	5	4	6	4-M6
AM25X1.5P	45	20	5	6	5	6	4-M6
AM30X1.5P	52	20	5	6	5	7	4-M6
AM30/65	65	30	6	6	6	8	4-M6
AM35/58	58	20	5	6	5	7	4-M6
AM35X1.5P	65	22	6	6	6	8	4-M6
AM40X1.5P	65	22	6	6	6	8	4-M6
AM40/85	85	32	6	6	6	8	4-M6
AM45X1.5P	70	22	6	6	6	8	6-M6
AM50X1.5P	75	25	6	8	6	8	6-M6
AM55X2.0P	85	26	6	8	6	8	6-M8
AM60X2.0P	90	26	6	8	6	8	6-M8
AM65X2.0P	100	26	8	8	8	10	6-M8
AM70X2.0P	100	28	8	9	8	10	6-M8
AM75X2.0P	115	30	8	10	8	10	6-M10
AM80X2.0P	110	30	8	10	8	10	6-M10
AM85X2.0P	115	30	8	10	8	10	6-M10
AM90X2.0P	130	32	8	13	8	10	6-M10
AM95X2.0P	130	30	8	10	8	10	8-M10
AM100X2.0P	130	30	8	10	8	10	8-M10
AM110X2.0P	140	30	8	10	8	10	8-M10
AM120X2.0P	155	30	8	10	8	10	8-M10
AM130X2.0P	165	30	8	10	8	10	8-M10

When ordering above products, please refer to the Type & Pitch.

- We typically appreciate orders 45 days in advance.

MKR SERIES - AXIAL LOCKING

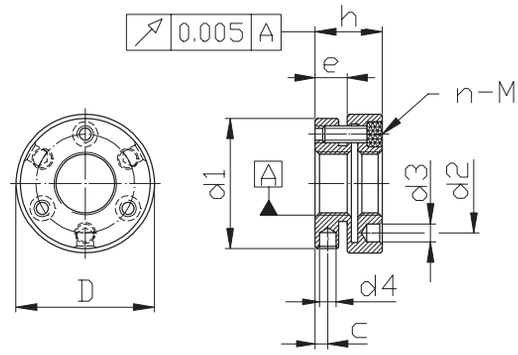

MKR10-MKR15

- The locknut connecting face is produced by grinding. The series is special designed to generate powerful braking capacity due to deformation of locknut itself. This results in male and female threads connecting tightly together.
- No thrust washer or keyway needed.
- Easy to assemble and disassemble.
- Can be reused if handled properly.

- **Material** SCM 440
- **Hardness** HRC 28-32
- **Precision** ISO 4H

Type & Pitch	Dimensions								Helical Angle	Screw	Torque	
	D	h	e	d1	d2	d3	d4	c		DIN	n	kg-cm
MKR10 x 0.75P	24	14	6.6	22	17	3.2	2.5	2.5	1.44	M3 x10	3	20
MKR10 x 1.0P		15							1.95			
MKR12 x 1.0P	26	14		25	19		3		1.61			
MKR12 x 1.5P		15							2.48			
MKR14 x 1.5P	32	16	7.6	30	22.5	4.3	4	3	2.10	M4 x10		30
MKR15 x 1.0P	33			31	23.5				1.27			
MKR16 x 1.5P	34	18	-	-	24.5			5	1.82	M4 x12	4	
MKR17 x 1.0P	35				25.5				1.21			
MKR18 x 1.5P	36				26.5				1.61			
MKR20 x 1.0P	40				30.5				0.94			
MKR20 x 1.5P									1.44			
MKR22 x 1.5P									1.30			
MKR24 x 1.5P	42				32.5				1.19			
MKR25 x 1.5P	45	20			36.5		5	6.5	1.14	M4x14		
MKR26 x 1.5P									1.09			
MKR28 x 1.5P	46				38.5				1.01			
MKR30 x 1.5P	48				40.5				0.94			
MKR32 x 1.5P	50	22			42.5			7	0.88	M4 x16		
MKR35 x 1.5P	53				45.5				0.80			
MKR38 x 1.5P	58				48.5				0.74			
MKR40 x 1.5P	58				50.5				0.70			
MKR42 x 1.5P	60				52.5				0.67			
MKR45 x 1.5P	68				58		6	6.5	0.62		6	
MKR48 x 1.5P		25			59.5			9	0.58	M4 x18		
MKR50 x 1.5P	70				61.5				0.56			
MKR52 x 1.5P	72				63.5				0.54			
MKR55 x 1.5P	75				66.5				0.51			
MKR55 x 2.0P									0.68			

1.

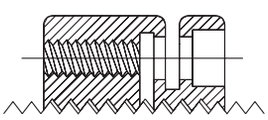

2.

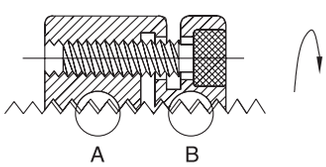

3.

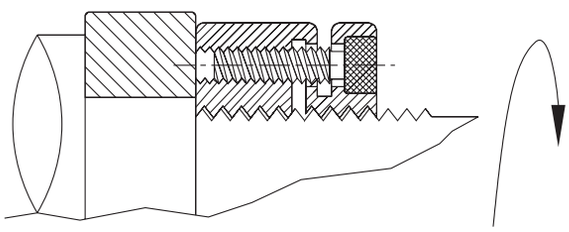

MKR SERIES - AXIAL LOCKING

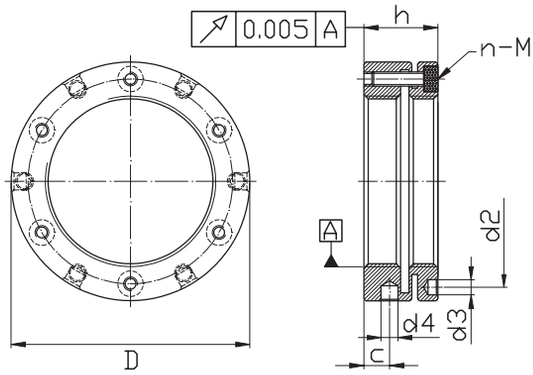

MKR16-MKR200

- The locknut connecting face is produced by grinding. The series is special designed to generate powerful braking capacity due to deformation of locknut itself. This results in male and female threads connecting tightly together.
- No thrust washer or keyway needed.
- Easy to assemble and disassemble.
- Can be reused if handled properly.

- **Material** SCM 440
- **Hardness** HRC 28-32
- **Precision** ISO 4H

Type & Pitch	Dimensions								Helical Angle	Screw	Torque	
	D	h	e	d1	d2	d3	d4	c		DIN	n	kg-cm
MKR58 x 1.5P	82	26	-	-	72.5	5.3	6	9	0.48	M5 x18	6	61
MKR60 x 1.5P	84				74.5				0.46			
MKR60 x 2.0P									0.62			
MKR62 x 1.5P	86	28			76.5			10.5	0.45	M5 x20		
MKR65 x 1.5P	88				78.5				0.43			
MKR65 x 2.0P									0.57			
MKR68 x 1.5P	95				83		8	9.5	0.41			
MKR70 x 1.5P	95		-	-	85				0.40			
MKR70 x 2.0P									0.53			
MKR72 x 1.5P	98				86	6.4		8.5	0.39	M6 x20		102
MKR75 x 1.5P	100				88				0.37			
MKR75 x 2.0P									0.50			
MKR80 x 2.0P	110	32			95			11	0.46			
MKR85 x 2.0P	115		-	-	100				0.44			
MKR90 x 2.0P	120				108				0.41			
MKR95 x 2.0P	125				113				0.39			
MKR100 x 2.0P	130				118				0.37			
MKR105 x 2.0P	135		-	-	123				0.35			
MKR110 x 2.0P	140				128				0.34			
MKR115 x 2.0P	145	36			133			13	0.32	M6 x25		
MKR120 x 2.0P	155				140				0.31			
MKR125 x 2.0P	160		-	-	148				0.29			
MKR130 x 3.0P	165				153				0.43			
MKR140 x 3.0P	180				165		10	12	0.40		8	
MKR150 x 3.0P	190				175				0.37			
MKR160 x 3.0P	205	40	-	-	185	8.4		14	0.35	M8 x30		255
MKR170 x 3.0P	215				195				0.33			
MKR180 x 3.0P	230				210				0.31			
MKR190 x 3.0P	240				224				0.29			
MKR200 x 3.0P	245				229				0.28			

When ordering above products, please refer to the Type & Pitch.

- If a left hand thread is required, please notify “L” after the Type & Pitch. For example:MKR25x1.5P -L
- If an inch thread is required, please refer to the Type & Pitch. For example:MKR25-U20
- We typically appreciate orders 45 days in advance.

MKW SERIES - AXIAL LOCKING

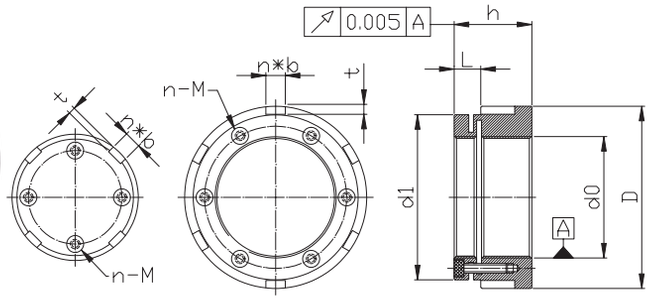

M35 and under **M40 and above**

- The locknut connecting face is produced by grinding. The series is special designed to generate powerful braking capacity due to deformation of locknut itself. This results in male and female threads connecting tightly together.
- No thrust washer or keyway needed.
- Easy to assemble and disassemble.
- Can be reused if handled properly.

- **Material** **SCM 440**
- **Precision** **ISO 4H**

Type	Dimensions							Clamping Screws
	d0	D	d1	h	n*b	t	L	n-screw
MKW20-28	M20X1.5	42	38	28	4*6	2.5	11	4-M4X14
MKW25-28	M25X1.5	47	43	28	4*7	3	11	4-M4X14
MKW30-28	M30X1.5	52	48	28	4*7	3	11	4-M4X14
MKW35-28	M35X1.5	60	53	28	4*8	3.5	11	4-M4X14
MKW40-28	M40X1.5	65	58	28	6*8	3.5	11	6-M4X14
MKW45-28	M45X1.5	70	63	28	6*8	3.5	11	6-M4X14
MKW50-32	M50X1.5	75	68	32	6*8	3.5	11	6-M4X14
MKW20-40	M20X1.5	52	42	40	4*7	3	11	4-M4X14
MKW25-40	M25X1.5	62	47	40	4*8	3.5	11	4-M4X14
MKW30-44	M30X1.5	68	52	44	4*8	3.5	11	4-M4X14
MKW35-44	M35X1.5	73	60	44	4*8	3.5	11	4-M4X14
MKW40-44	M40X1.5	75	62	44	6*8	3.5	11	6-M4X14
MKW45-44	M45X1.5	90	70	44	6*10	4	11	6-M4X14
MKW50-46	M50X1.5	95	75	46	6*10	4	11	6-M4X14
MKW55-46	M55X1.5	100	80	46	6*10	4	12	6-M5X16
MKW60-46	M60X1.5	100	85	46	6*10	4	12	6-M5X16
MKW65-46	M65X1.5	110	90	46	6*10	4	12	6-M5X16
MKW70-46	M70X1.5	115	95	46	6*10	4	12	6-M5X16

When ordering above products, please refer to the Type & Pitch.

- We typically appreciate orders 45 days in advance.

TECHNICAL INFORMATION

Angular Displacement Loosening Torque

Remarks:
(a)The data are for reference only
(b)1Nm=10.2kgf.cm=0.73lb.ft

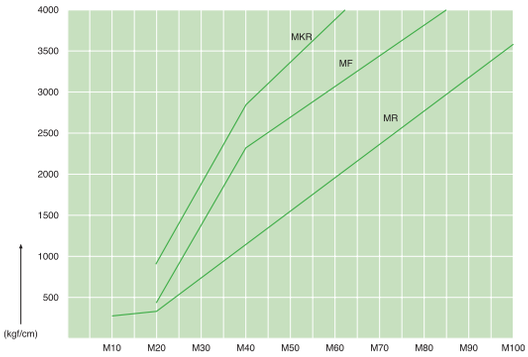

Axial Load Static

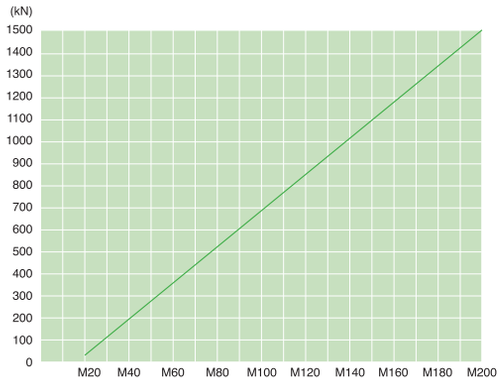

Threading Profile

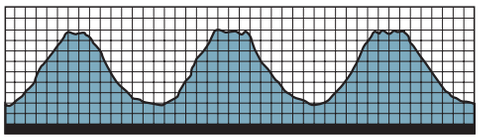

Traditional threading surface profile

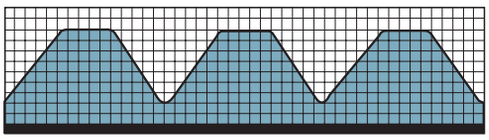

MF, MR series threading surface profile by precision grinding

CORRECT ASSEMBLY METHOD

e.g. MF, MR SERIES

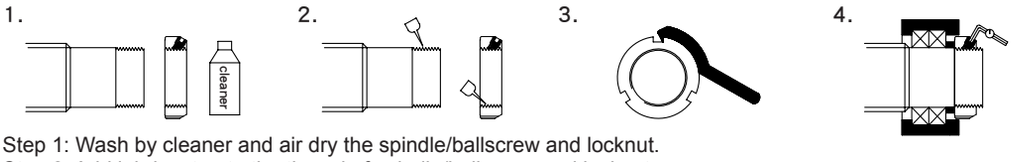

Step 1: Wash by cleaner and air dry the spindle/ballscrew and locknut.
Step 2: Add lubricant onto the thread of spindle/ballscrew and locknut.
Step 3: Use appropriate tool and torque wrench to do the fixation.
Step 4: Drive the setscrews tightly.

e.g. MKR SERIES

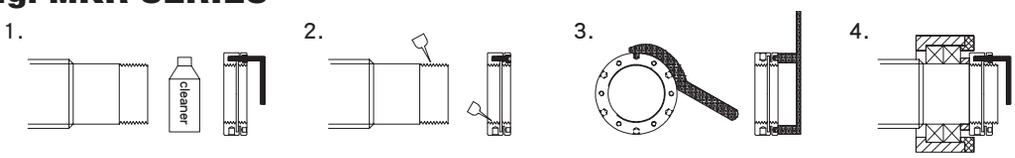

Step 1: Wash by cleaner and air dry the spindle/ballscrew and locknut, loose up the soket head screws of the locknut.
Step 2: Add lubricant onto the thread of spindle/ballscrew and locknut.
Step 3: Use appropriate tool and torque wrench to do the fixation.
Step 4: Drive the socket head screws tightly.

CORRECT DISASSEMBLY METHOD

e.g. MF,MR SERIES

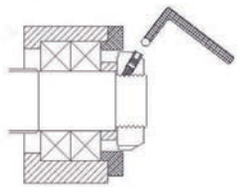

Step 1: Loosen the setscrews and clean the spindle/ ballscrew.

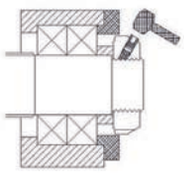

Step2: Lightly tapped the setscrews head by rubber mallet.

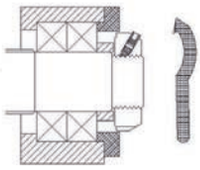

Step 3: Loosen the locknut by an appropriate tool.

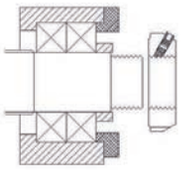

Step 4: Take off the locknut.

e.g. MKR SERIES

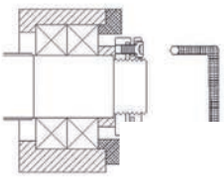

Step 1: Loosen the socket head screws.

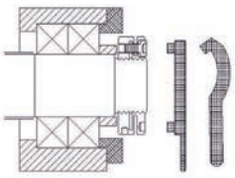

Step 2: Loosen the locknut by an appropriate tool.

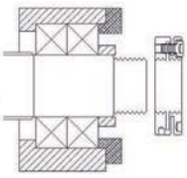

Step 3: Take off the locknut.